Allegheny York

Type B Loaded Lip Seals - Inch

ALTERNATIVE SEALS:
Rod: Deep LLS, UNRR, LLS
BD, BSLL, BS-B, BS, BT, UNR, US, DZ

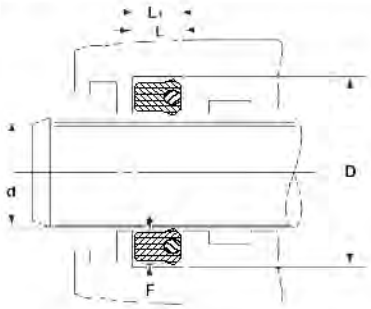

EXAMPLE: 25003000-375B				
Cross Section	Inside Diameter		Height	Suffix
250	03000	-	375	B
1/4"	3"		3/8"	Beveled Lip

Type B Loaded Lip Seals are recommended only for rod seal applications. The high lip interference combined with a beveled lip provide the driest rod sealing of these configurations. The rectangular configuration gives good down stream stability making this seal the standard of the industry. They are manufactured from high quality 90 durometer polyurethane. They are also available in other materials; consult sales office for price and availability.

Temperature: -65°F to 200°F Pressure: 0 to 5,000 PSI

Part Number	Rod Diameter d	Groove Diameter D	Seal Height L_1	Groove Height L
1/8" CROSS SECTION ("F")				
12500125-250B	0.125	0.375	0.250	0.275
12500187-250B	0.187	0.437	0.250	0.275
12500250-125B	0.250	0.500	0.125	0.138
12500250-187B	0.250	0.500	0.187	0.206
12500250-250B	0.250	0.500	0.250	0.275
12500312-125B	0.312	0.562	0.125	0.138
12500312-250B	0.312	0.562	0.250	0.275
12500375-125B	0.375	0.625	0.125	0.138
12500375-187B	0.375	0.625	0.187	0.206
12500375-250B	0.375	0.625	0.250	0.275
12500437-250B	0.437	0.687	0.250	0.275
12500500-125B	0.500	0.750	0.125	0.138
12500500-250B	0.500	0.750	0.250	0.275
12500562-125B	0.562	0.812	0.125	0.138
12500562-250B	0.562	0.812	0.250	0.275
12500625-125B	0.625	0.875	0.125	0.138
12500625-187B	0.625	0.875	0.187	0.206
12500625-250B	0.625	0.875	0.250	0.275
12500687-250B	0.687	0.937	0.250	0.275
12500750-125B	0.750	1.000	0.125	0.138
12500750-187B	0.750	1.000	0.187	0.206
12500750-250B	0.750	1.000	0.250	0.275
12500812-125B	0.812	1.062	0.125	0.138
12500812-250B	0.812	1.062	0.250	0.275
12500875-125B	0.875	1.125	0.125	0.138
12500875-187B	0.875	1.125	0.187	0.206
12500875-250B	0.875	1.125	0.250	0.275
12500937-125B	0.937	1.187	0.125	0.138

Part Number	Rod Diameter d	Groove Diameter D	Seal Height L_1	Groove Height L
1/8" CROSS SECTION ("F")				
12500937-250B	0.937	1.187	0.250	0.275
12501000-125B	1.000	1.250	0.125	0.138
12501000-156B	1.000	1.250	0.156	0.172
12501000-187B	1.000	1.250	0.187	0.206
12501000-250B	1.000	1.250	0.250	0.275
12501062-125B	1.062	1.312	0.125	0.138
12501062-170B	1.062	1.312	0.170	0.187
12501062-250B	1.062	1.312	0.250	0.275
12501125-125B	1.125	1.375	0.125	0.138
12501125-177B	1.125	1.375	0.177	0.195
12501125-187B	1.125	1.375	0.187	0.206
12501125-250B	1.125	1.375	0.250	0.275
12501125-312B	1.125	1.375	0.312	0.343
12501187-187B	1.187	1.437	0.187	0.206
12501187-250B	1.187	1.437	0.250	0.275
12501250-125B	1.250	1.500	0.125	0.138
12501250-187B	1.250	1.500	0.187	0.206
12501250-250B	1.250	1.500	0.250	0.275
12501312-187B	1.312	1.562	0.187	0.206
12501375-125B	1.375	1.625	0.125	0.138
12501375-178B	1.375	1.625	0.178	0.196
12501375-187B	1.375	1.625	0.187	0.206
12501375-250B	1.375	1.625	0.250	0.275
12501437-125B	1.437	1.687	0.125	0.138
12501437-250B	1.437	1.687	0.250	0.275
12501500-125B	1.500	1.750	0.125	0.138
12501500-187B	1.500	1.750	0.187	0.206
12501500-250B	1.500	1.750	0.250	0.275

Type B Loaded Lip Seals - Inch, cont'd.

Part Number	Rod Diameter d	Groove Diameter D	Seal Height L_1	Groove Height L
1/8" CROSS SECTION ("F")				
12501625-187B	1.625	1.875	0.187	0.206
12501625-250B	1.625	1.875	0.250	0.275
12501750-125B	1.750	2.000	0.125	0.138
12501750-250B	1.750	2.000	0.250	0.275
12501875-125B	1.875	2.125	0.125	0.138
12501875-187B	1.875	2.125	0.187	0.206
12501875-250B	1.875	2.125	0.250	0.275
12502000-187B	2.000	2.250	0.187	0.206
12502000-250B	2.000	2.250	0.250	0.275
12502125-250B	2.125	2.375	0.250	0.275
12502500-250B	2.500	2.750	0.250	0.275
12502875-250B	2.875	3.125	0.250	0.275
12504500-187B	4.500	4.750	0.187	0.206
5/32" CROSS SECTION ("F")				
15601000-156B	1.000	1.312	0.156	0.172
15601000-230B	1.000	1.312	0.230	0.253
15601500-312B	1.500	1.812	0.312	0.343
3/16" CROSS SECTION ("F")				
18700250-187B	0.250	0.625	0.187	0.206
18700312-187B	0.312	0.687	0.187	0.206
18700312-312B	0.312	0.687	0.312	0.343
18700375-187B	0.375	0.750	0.187	0.206
18700375-312B	0.375	0.750	0.312	0.343
18700437-312B	0.437	0.812	0.312	0.343
18700500-250B	0.500	0.875	0.250	0.275
18700500-312B	0.500	0.875	0.312	0.343
18700562-312B	0.562	0.937	0.312	0.343
18700625-312B	0.625	1.000	0.312	0.343
18700750-187B	0.750	1.125	0.187	0.206
18700750-250B	0.750	1.125	0.250	0.275
18700750-312B	0.750	1.125	0.312	0.343
18700750-375B	0.750	1.125	0.375	0.413
18700812-312B	0.812	1.187	0.312	0.343
18700875-312B	0.875	1.250	0.312	0.343
18700937-312B	0.937	1.312	0.312	0.343
18701000-187B	1.000	1.375	0.187	0.206
18701000-250B	1.000	1.375	0.250	0.275
18701000-312B	1.000	1.375	0.312	0.343
18701000-375B	1.000	1.375	0.375	0.413
18701062-312B	1.062	1.437	0.312	0.343
18701125-187B	1.125	1.500	0.187	0.206
18701125-250B	1.125	1.500	0.250	0.275
18701125-312B	1.125	1.500	0.312	0.343
18701187-312B	1.187	1.562	0.312	0.343
18701250-187B	1.250	1.625	0.187	0.206

Part Number	Rod Diameter d	Groove Diameter D	Seal Height L_1	Groove Height L
3/16" CROSS SECTION ("F")				
18701250-250B	1.250	1.625	0.250	0.275
18701250-312B	1.250	1.625	0.312	0.343
18701250-375B	1.250	1.625	0.375	0.413
18701312-187B	1.312	1.687	0.187	0.206
18701312-312B	1.312	1.687	0.312	0.343
18701375-187B	1.375	1.750	0.187	0.206
18701375-250B	1.375	1.750	0.250	0.275
18701375-312B	1.375	1.750	0.312	0.343
18701375-375B	1.375	1.750	0.375	0.413
18701437-312B	1.437	1.812	0.312	0.343
18701500-187B	1.500	1.875	0.187	0.206
18701500-250B	1.500	1.875	0.250	0.275
18701500-312B	1.500	1.875	0.312	0.343
18701500-375B	1.500	1.875	0.375	0.413
18701500-406B	1.500	1.875	0.406	0.447
18701625-187B	1.625	2.000	0.187	0.206
18701625-250B	1.625	2.000	0.250	0.275
18701625-312B	1.625	2.000	0.312	0.343
18701625-375B	1.625	2.000	0.375	0.413
18701750-187B	1.750	2.125	0.187	0.206
18701750-230B	1.750	2.125	0.230	0.253
18701750-250B	1.750	2.125	0.250	0.275
18701750-266B	1.750	2.125	0.266	0.293
18701750-312B	1.750	2.125	0.312	0.343
18701750-375B	1.750	2.125	0.375	0.413
18701875-187B	1.875	2.250	0.187	0.206
18701875-312B	1.875	2.250	0.312	0.343
18701875-375B	1.875	2.250	0.375	0.413
18701937-281B	1.937	2.312	0.281	0.309
18702000-187B	2.000	2.375	0.187	0.206
18702000-230B	2.000	2.375	0.230	0.253
18702000-250B	2.000	2.375	0.250	0.275
18702000-312B	2.000	2.375	0.312	0.343
18702000-375B	2.000	2.375	0.375	0.413
18702125-187B	2.125	2.500	0.187	0.206
18702125-250B	2.125	2.500	0.250	0.275
18702125-375B	2.125	2.500	0.375	0.413
18702250-187B	2.250	2.625	0.187	0.206
18702250-312B	2.250	2.625	0.312	0.343
18702250-375B	2.250	2.625	0.375	0.413
18702375-187B	2.375	2.750	0.187	0.206
18702375-375B	2.375	2.750	0.375	0.413
18702500-250B	2.500	2.875	0.250	0.275
18702500-312B	2.500	2.875	0.312	0.343
18702500-375B	2.500	2.875	0.375	0.413

Type B Loaded Lip Seals - Inch, cont'd.

Part Number	Rod Diameter d	Groove Diameter D	Seal Height L_1	Groove Height L
3/16" CROSS SECTION ("F")				
18702625-187B	2.625	3.000	0.187	0.206
18702625-250B	2.625	3.000	0.250	0.275
18702625-281B	2.625	3.000	0.281	0.309
18702625-312B	2.625	3.000	0.312	0.343
18702625-375B	2.625	3.000	0.375	0.413
18702750-187B	2.750	3.125	0.187	0.206
18702750-281B	2.750	3.125	0.281	0.309
18702750-312B	2.750	3.125	0.312	0.343
18702750-375B	2.750	3.125	0.375	0.413
18702875-281B	2.875	3.250	0.281	0.309
18702875-375B	2.875	3.250	0.375	0.413
18703000-187B	3.000	3.375	0.187	0.206
18703000-250B	3.000	3.375	0.250	0.275
18703000-312B	3.000	3.375	0.312	0.343
18703000-375B	3.000	3.375	0.375	0.413
18703125-187B	3.125	3.500	0.187	0.206
18703125-250B	3.125	3.500	0.250	0.275
18703125-312B	3.125	3.500	0.312	0.343
18703125-375B	3.125	3.500	0.375	0.413
18703250-312B	3.250	3.625	0.312	0.343
18703250-375B	3.250	3.625	0.375	0.413
18703375-187B	3.375	3.750	0.187	0.206
18703375-250B	3.375	3.750	0.250	0.275
18703375-375B	3.375	3.750	0.375	0.413
18703500-281B	3.500	3.875	0.281	0.309
18703500-375B	3.500	3.875	0.375	0.413
18703625-250B	3.625	4.000	0.250	0.275
18703625-312B	3.625	4.000	0.312	0.343
18703625-375B	3.625	4.000	0.375	0.413
18703750-312B	3.750	4.125	0.312	0.343
18703750-375B	3.750	4.125	0.375	0.413
18703875-375B	3.875	4.250	0.375	0.413
18704000-187B	4.000	4.375	0.187	0.206
18704000-250B	4.000	4.375	0.250	0.275
18704000-312B	4.000	4.375	0.312	0.343
18704000-375B	4.000	4.375	0.375	0.413
18704125-250B	4.125	4.500	0.250	0.275
18704125-375B	4.125	4.500	0.375	0.413
18704250-281B	4.250	4.625	0.281	0.309
18704250-312B	4.250	4.625	0.312	0.343
18704375-375B	4.375	4.750	0.375	0.413
18704500-375B	4.500	4.875	0.375	0.413
18704625-250B	4.625	5.000	0.250	0.275
18704625-312B	4.625	5.000	0.312	0.343
18704625-375B	4.625	5.000	0.375	0.413

Part Number	Rod Diameter d	Groove Diameter D	Seal Height L_1	Groove Height L
3/16" CROSS SECTION ("F")				
18704750-375B	4.750	5.125	0.375	0.413
18704875-375B	4.875	5.250	0.375	0.413
18705000-375B	5.000	5.375	0.375	0.413
18705500-375B	5.500	5.875	0.375	0.413
18707000-375B	7.000	7.375	0.375	0.413
1/4" CROSS SECTION ("F")				
25000250-375B	0.250	0.750	0.375	0.413
25000500-375B	0.500	1.000	0.375	0.413
25000625-250B	0.625	1.125	0.250	0.275
25000625-312B	0.625	1.125	0.312	0.343
25000625-375B	0.625	1.125	0.375	0.413
25000687-250B	0.687	1.187	0.250	0.275
25000687-375B	0.687	1.187	0.375	0.413
25000750-375B	0.750	1.250	0.375	0.413
25000875-250B	0.875	1.375	0.250	0.275
25000875-312B	0.875	1.375	0.312	0.343
25000875-375B	0.875	1.375	0.375	0.413
25001000-250B	1.000	1.500	0.250	0.275
25001000-375B	1.000	1.500	0.375	0.413
25001125-250B	1.125	1.625	0.250	0.275
25001125-375B	1.125	1.625	0.375	0.413
25001187-375B	1.187	1.687	0.375	0.413
25001250-250B	1.250	1.750	0.250	0.275
25001250-375B	1.250	1.750	0.375	0.413
25001312-375B	1.312	1.812	0.375	0.413
25001375-250B	1.375	1.875	0.250	0.275
25001375-375B	1.375	1.875	0.375	0.413
25001500-250B	1.500	2.000	0.250	0.275
25001500-312B	1.500	2.000	0.312	0.343
25001500-375B	1.500	2.000	0.375	0.413
25001625-375B	1.625	2.125	0.375	0.413
25001750-250B	1.750	2.250	0.250	0.275
25001750-312B	1.750	2.250	0.312	0.343
25001750-375B	1.750	2.250	0.375	0.413
25001875-375B	1.875	2.375	0.375	0.413
25001937-375B	1.937	2.437	0.375	0.413
25002000-250B	2.000	2.500	0.250	0.275
25002000-312B	2.000	2.500	0.312	0.343
25002000-375B	2.000	2.500	0.375	0.413
25002125-250B	2.125	2.625	0.250	0.275
25002125-375B	2.125	2.625	0.375	0.413
25002250-375B	2.250	2.750	0.375	0.413
25002375-375B	2.375	2.875	0.375	0.413
25002500-250B	2.500	3.000	0.250	0.275
25002500-312B	2.500	3.000	0.312	0.343

Type B Loaded Lip Seals - Inch, cont'd.

Part Number	Rod Diameter d	Groove Diameter D	Seal Height L_1	Groove Height L
1/4" CROSS SECTION ("F")				
25002500-375B	2.500	3.000	0.375	0.413
25002500-500B	2.500	3.000	0.500	0.550
25002562-375B	2.562	3.062	0.375	0.413
25002625-375B	2.625	3.125	0.375	0.413
25002750-250B	2.750	3.250	0.250	0.275
25002750-375B	2.750	3.250	0.375	0.413
25002875-375B	2.875	3.375	0.375	0.413
25003000-250B	3.000	3.500	0.250	0.275
25003000-375B	3.000	3.500	0.375	0.413
25003000-500B	3.000	3.500	0.500	0.550
25003000-562B	3.000	3.500	0.562	0.618
25003125-250B	3.125	3.625	0.250	0.275
25003125-375B	3.125	3.625	0.375	0.413
25003250-375B	3.250	3.750	0.375	0.413
25003375-375B	3.375	3.875	0.375	0.413
25003500-250B	3.500	4.000	0.250	0.275
25003500-312B	3.500	4.000	0.312	0.343
25003500-375B	3.500	4.000	0.375	0.413
25003500-625B	3.500	4.000	0.625	0.688
25003625-375B	3.625	4.125	0.375	0.413
25003690-500B	3.690	4.190	0.500	0.550
25003750-250B	3.750	4.250	0.250	0.275
25003750-375B	3.750	4.250	0.375	0.413
25003750-562B	3.750	4.250	0.562	0.618
25004000-250B	4.000	4.500	0.250	0.275
25004000-375B	4.000	4.500	0.375	0.413
25004000-500B	4.000	4.500	0.500	0.550
25004000-562B	4.000	4.500	0.562	0.618
25004125-250B	4.125	4.625	0.250	0.275
25004125-375B	4.125	4.625	0.375	0.413
25004125-562B	4.125	4.625	0.562	0.618
25004250-250B	4.250	4.750	0.250	0.275
25004250-375B	4.250	4.750	0.375	0.413
25004250-562B	4.250	4.750	0.562	0.618
25004375-250B	4.375	4.875	0.250	0.275
25004375-375B	4.375	4.875	0.375	0.413
25004375-562B	4.375	4.875	0.562	0.618
25004437-375B	4.437	4.937	0.375	0.413
25004500-250B	4.500	5.000	0.250	0.275
25004500-312B	4.500	5.000	0.312	0.343
25004500-375B	4.500	5.000	0.375	0.413
25004500-500B	4.500	5.000	0.500	0.550
25004500-562B	4.500	5.000	0.562	0.618
25004500-625B	4.500	5.000	0.625	0.688
25004625-250B	4.625	5.125	0.250	0.275

Part Number	Rod Diameter d	Groove Diameter D	Seal Height L_1	Groove Height L
1/4" CROSS SECTION ("F")				
25004625-562B	4.625	5.125	0.562	0.618
25004750-375B	4.750	5.250	0.375	0.413
25004750-500B	4.750	5.250	0.500	0.550
25004750-562B	4.750	5.250	0.562	0.618
25004875-375B	4.875	5.375	0.375	0.413
25004875-562B	4.875	5.375	0.562	0.618
25005000-250B	5.000	5.500	0.250	0.275
25005000-375B	5.000	5.500	0.375	0.413
25005000-500B	5.000	5.500	0.500	0.550
25005000-562B	5.000	5.500	0.562	0.618
25005250-375B	5.250	5.750	0.375	0.413
25005250-562B	5.250	5.750	0.562	0.618
25005375-562B	5.375	5.875	0.562	0.618
25005500-375B	5.500	6.000	0.375	0.413
25005500-500B	5.500	6.000	0.500	0.550
25005500-562B	5.500	6.000	0.562	0.618
25005625-562B	5.625	6.125	0.562	0.618
25005750-375B	5.750	6.250	0.375	0.413
25005750-562B	5.750	6.250	0.562	0.618
25006000-375B	6.000	6.500	0.375	0.413
25006000-437B	6.000	6.500	0.437	0.481
25006000-500B	6.000	6.500	0.500	0.550
25006000-562B	6.000	6.500	0.562	0.618
25006250-375B	6.250	6.750	0.375	0.413
25006250-562B	6.250	6.750	0.562	0.618
25006500-375B	6.500	7.000	0.375	0.413
25006500-500B	6.500	7.000	0.500	0.550
25006500-562B	6.500	7.000	0.562	0.618
25006750-375B	6.750	7.250	0.375	0.413
25006750-500B	6.750	7.250	0.500	0.550
25006750-562B	6.750	7.250	0.562	0.618
25007000-375B	7.000	7.500	0.375	0.413
25007000-500B	7.000	7.500	0.500	0.550
25007000-562B	7.000	7.500	0.562	0.618
25007250-562B	7.250	7.750	0.562	0.618
25007500-375B	7.500	8.000	0.375	0.413
25007500-500B	7.500	8.000	0.500	0.550
25007500-562B	7.500	8.000	0.562	0.618
25007750-562B	7.750	8.250	0.562	0.618
25008000-375B	8.000	8.500	0.375	0.413
25008000-562B	8.000	8.500	0.562	0.618
25008125-562B	8.125	8.625	0.562	0.618
25008250-375B	8.250	8.750	0.375	0.413
25008250-562B	8.250	8.750	0.562	0.618
25008500-375B	8.500	9.000	0.375	0.413

Type B Loaded Lip Seals - Inch, cont'd.

Part Number	Rod Diameter d	Groove Diameter D	Seal Height L_1	Groove Height L
1/4" CROSS SECTION ("F")				
25008500-562B	8.500	9.000	0.562	0.618
25009000-375B	9.000	9.500	0.375	0.413
25009000-562B	9.000	9.500	0.562	0.618
25009500-562B	9.500	10.000	0.562	0.618
25009750-562B	9.750	10.250	0.562	0.618
25010000-562B	10.000	10.500	0.562	0.618
25011000-562B	11.000	11.500	0.562	0.618
25011250-562B	11.250	11.750	0.562	0.618
9/32" CROSS SECTION ("F")				
28103937-500B	3.937	4.500	0.500	0.550
28104437-500B	4.437	5.000	0.500	0.550
28104687-625B	4.687	5.250	0.625	0.688
28105437-562B	5.437	6.000	0.562	0.618
.285" CROSS SECTION ("F")				
28502200-500B	2.200	2.770	0.500	0.550
28503200-500BSA2211	3.200	3.770	0.500	0.550
5/16" CROSS SECTION ("F")				
31200750-500B	0.750	1.375	0.500	0.550
31201000-375B	1.000	1.625	0.375	0.413
31201000-500B	1.000	1.625	0.500	0.550
31201125-375B	1.125	1.750	0.375	0.413
31201125-500B	1.125	1.750	0.500	0.550
31201250-312B	1.250	1.875	0.312	0.343
31201250-500B	1.250	1.875	0.500	0.550
31201375-312B	1.375	2.000	0.312	0.343
31201375-375B	1.375	2.000	0.375	0.413
31201375-500B	1.375	2.000	0.500	0.550
31201500-312B	1.500	2.125	0.312	0.343
31201500-375B	1.500	2.125	0.375	0.413
31201500-500B	1.500	2.125	0.500	0.550
31201625-375B	1.625	2.250	0.375	0.413
31201625-500B	1.625	2.250	0.500	0.550
31201687-500B	1.687	2.312	0.500	0.550
31201750-375B	1.750	2.375	0.375	0.413
31201750-500B	1.750	2.375	0.500	0.550
31201875-375B	1.875	2.500	0.375	0.413
31201875-500B	1.875	2.500	0.500	0.550
31202000-500B	2.000	2.625	0.500	0.550
31202000-562B	2.000	2.625	0.562	0.618
31202125-500B	2.125	2.750	0.500	0.550
31202250-312B	2.250	2.875	0.312	0.343
31202250-500B	2.250	2.875	0.500	0.550
31202375-312B	2.375	3.000	0.312	0.343
31202375-500B	2.375	3.000	0.500	0.550
31202500-375B	2.500	3.125	0.375	0.413

Part Number	Rod Diameter d	Groove Diameter D	Seal Height L_1	Groove Height L
5/16" CROSS SECTION ("F")				
31202500-500B	2.500	3.125	0.500	0.550
31202625-312B	2.625	3.250	0.312	0.343
31202625-500B	2.625	3.250	0.500	0.550
31202750-312B	2.750	3.375	0.312	0.343
31202750-375B	2.750	3.375	0.375	0.413
31202750-500B	2.750	3.375	0.500	0.550
31202875-375B	2.875	3.500	0.375	0.413
31202875-500B	2.875	3.500	0.500	0.550
31203000-375B	3.000	3.625	0.375	0.413
31203000-500B	3.000	3.625	0.500	0.550
31203125-500B	3.125	3.750	0.500	0.550
31203250-312B	3.250	3.875	0.312	0.343
31203250-500B	3.250	3.875	0.500	0.550
31203375-312B	3.375	4.000	0.312	0.343
31203375-500B	3.375	4.000	0.500	0.550
31203375-625B	3.375	4.000	0.625	0.688
31203500-375B	3.500	4.125	0.375	0.413
31203500-500B	3.500	4.125	0.500	0.550
31203625-500B	3.625	4.250	0.500	0.550
31203750-375B	3.750	4.375	0.375	0.413
31203750-500B	3.750	4.375	0.500	0.550
31203750-625B	3.750	4.375	0.625	0.688
31204000-500B	4.000	4.625	0.500	0.550
31204000-562B	4.000	4.625	0.562	0.618
31204125-500B	4.125	4.750	0.500	0.550
31204125-562B	4.125	4.750	0.562	0.618
31204125-625B	4.125	4.750	0.625	0.688
31204250-312B	4.250	4.875	0.312	0.343
31204250-500B	4.250	4.875	0.500	0.550
31204250-562B	4.250	4.875	0.562	0.618
31204375-312B	4.375	5.000	0.312	0.343
31204375-500B	4.375	5.000	0.500	0.550
31204375-562B	4.375	5.000	0.562	0.618
31204375-625B	4.375	5.000	0.625	0.688
31204500-375B	4.500	5.125	0.375	0.413
31204500-562B	4.500	5.125	0.562	0.618
31204500-625B	4.500	5.125	0.625	0.688
31204625-625B	4.625	5.250	0.625	0.688
31204750-500B	4.750	5.375	0.500	0.550
31204750-625B	4.750	5.375	0.625	0.688
31205000-625B	5.000	5.625	0.625	0.688
31205125-625B	5.125	5.750	0.625	0.688
31205250-625B	5.250	5.875	0.625	0.688
31205375-625B	5.375	6.000	0.625	0.688
31205500-312B	5.500	6.125	0.312	0.343

Type B Loaded Lip Seals - Inch, cont'd.

Part Number	Rod Diameter d	Groove Diameter D	Seal Height L_1	Groove Height L
5/16" CROSS SECTION ("F")				
31205500-625B	5.500	6.125	0.625	0.688
31205625-625B	5.625	6.250	0.625	0.688
31205750-625B	5.750	6.375	0.625	0.688
31206000-625B	6.000	6.625	0.625	0.688
31206375-312B	6.375	7.000	0.312	0.343
31206500-625B	6.500	7.125	0.625	0.688
31206625-625B	6.625	7.250	0.625	0.688
31206750-625B	6.750	7.375	0.625	0.688
31207000-625B	7.000	7.625	0.625	0.688
31207250-625B	7.250	7.875	0.625	0.688
31207375-312B	7.375	8.000	0.312	0.343
31207375-500B	7.375	8.000	0.500	0.550
31207375-625B	7.375	8.000	0.625	0.688
31207875-625B	7.875	8.500	0.625	0.688
31208000-500B	8.000	8.625	0.500	0.550
31208000-625B	8.000	8.625	0.625	0.688
31208500-625B	8.500	9.125	0.625	0.688
31209250-625B	9.250	9.875	0.625	0.688
31209375-625B	9.375	10.000	0.625	0.688
31209750-625B	9.750	10.375	0.625	0.688
31210375-625B	10.375	11.000	0.625	0.688
31212250-625B	12.250	12.875	0.625	0.688
31212500-625B	12.500	13.125	0.625	0.688
3/8" CROSS SECTION ("F")				
37501250-500B	1.250	2.000	0.500	0.550
37501250-625B	1.250	2.000	0.625	0.688
37501375-625B	1.375	2.125	0.625	0.688
37501500-500B	1.500	2.250	0.500	0.550
37501500-625B	1.500	2.250	0.625	0.688
37501625-625B	1.625	2.375	0.625	0.688
37501750-500B	1.750	2.500	0.500	0.550
37501750-625B	1.750	2.500	0.625	0.688
37502000-375B	2.000	2.750	0.375	0.413
37502000-500B	2.000	2.750	0.500	0.550
37502000-625B	2.000	2.750	0.625	0.688
37502250-375B	2.250	3.000	0.375	0.413
37502250-500B	2.250	3.000	0.500	0.550
37502250-625B	2.250	3.000	0.625	0.688
37502375-625B	2.375	3.125	0.625	0.688
37502500-375B	2.500	3.250	0.375	0.413
37502500-500B	2.500	3.250	0.500	0.550
37502500-625B	2.500	3.250	0.625	0.688
37502625-625B	2.625	3.375	0.625	0.688
37502750-500B	2.750	3.500	0.500	0.550
37502750-625B	2.750	3.500	0.625	0.688

Part Number	Rod Diameter d	Groove Diameter D	Seal Height L_1	Groove Height L
3/8" CROSS SECTION ("F")				
37502875-625B	2.875	3.625	0.625	0.688
37503000-500B	3.000	3.750	0.500	0.550
37503000-625B	3.000	3.750	0.625	0.688
37503125-625B	3.125	3.875	0.625	0.688
37503250-375B	3.250	4.000	0.375	0.413
37503250-500B	3.250	4.000	0.500	0.550
37503250-625B	3.250	4.000	0.625	0.688
37503375-625B	3.375	4.125	0.625	0.688
37503500-500B	3.500	4.250	0.500	0.550
37503500-625B	3.500	4.250	0.625	0.688
37503625-625B	3.625	4.375	0.625	0.688
37503750-375B	3.750	4.500	0.375	0.413
37503750-500B	3.750	4.500	0.500	0.550
37503750-625B	3.750	4.500	0.625	0.688
37503875-625B	3.875	4.625	0.625	0.688
37504000-500B	4.000	4.750	0.500	0.550
37504000-625B	4.000	4.750	0.625	0.688
37504250-375B	4.250	5.000	0.375	0.413
37504250-500B	4.250	5.000	0.500	0.550
37504250-625B	4.250	5.000	0.625	0.688
37504500-500B	4.500	5.250	0.500	0.550
37504500-625B	4.500	5.250	0.625	0.688
37504625-625B	4.625	5.375	0.625	0.688
37504750-500B	4.750	5.500	0.500	0.550
37504750-625B	4.750	5.500	0.625	0.688
37504875-625B	4.875	5.625	0.625	0.688
37505000-500B	5.000	5.750	0.500	0.550
37505000-625B	5.000	5.750	0.625	0.688
37505125-625B	5.125	5.875	0.625	0.688
37505250-375B	5.250	6.000	0.375	0.413
37505250-500B	5.250	6.000	0.500	0.550
37505250-625B	5.250	6.000	0.625	0.688
37505250-750B	5.250	6.000	0.750	0.825
37505375-625B	5.375	6.125	0.625	0.688
37505500-500B	5.500	6.250	0.500	0.550
37505500-625B	5.500	6.250	0.625	0.688
37505750-500B	5.750	6.500	0.500	0.550
37505750-625B	5.750	6.500	0.625	0.688
37505875-625B	5.875	6.625	0.625	0.688
37506000-500B	6.000	6.750	0.500	0.550
37506000-625B	6.000	6.750	0.625	0.688
37506250-500B	6.250	7.000	0.500	0.550
37506250-625B	6.250	7.000	0.625	0.688
37506500-500B	6.500	7.250	0.500	0.550
37506500-625B	6.500	7.250	0.625	0.688

Type B Loaded Lip Seals - Inch, cont'd.

Part Number	Rod Diameter d	Groove Diameter D	Seal Height L_1	Groove Height L
3/8" CROSS SECTION ("F")				
37506750-375B	6.750	7.500	0.375	0.413
37506750-500B	6.750	7.500	0.500	0.550
37506750-625B	6.750	7.500	0.625	0.688
37507000-500B	7.000	7.750	0.500	0.550
37507000-625B	7.000	7.750	0.625	0.688
37507250-375B	7.250	8.000	0.375	0.413
37507250-500B	7.250	8.000	0.500	0.550
37507250-625B	7.250	8.000	0.625	0.688
37507250-750B	7.250	8.000	0.750	0.825
37507500-500B	7.500	8.250	0.500	0.550
37507500-625B	7.500	8.250	0.625	0.688
37507750-500B	7.750	8.500	0.500	0.550
37507750-625B	7.750	8.500	0.625	0.688
37508000-625B	8.000	8.750	0.625	0.688
37508250-625B	8.250	9.000	0.625	0.688
37508500-625B	8.500	9.250	0.625	0.688
37508750-500B	8.750	9.500	0.500	0.550
37508750-750B	8.750	9.500	0.750	0.825
37509000-625B	9.000	9.750	0.625	0.688
37509250-625B	9.250	10.000	0.625	0.688
37509500-625B	9.500	10.250	0.625	0.688
37510000-625B	10.000	10.750	0.625	0.688
37510250-500B	10.250	11.000	0.500	0.550
37510250-750B	10.250	11.000	0.750	0.825
37510500-625B	10.500	11.250	0.625	0.688
37510750-625B	10.750	11.500	0.625	0.688
37511250-375B	11.250	12.000	0.375	0.413
37511250-625B	11.250	12.000	0.625	0.688
37511750-625B	11.750	12.500	0.625	0.688
37512250-625B	12.250	13.000	0.625	0.688
37513000-625B	13.000	13.750	0.625	0.688
37513500-625B	13.500	14.250	0.625	0.688
37513750-625B	13.750	14.500	0.625	0.688
37514250-625B	14.250	15.000	0.625	0.688
37514750-625B	14.750	15.500	0.625	0.688
37520750-500B	20.750	21.500	0.500	0.550
7/16" CROSS SECTION ("F")				
43702250-625B	2.250	3.125	0.625	0.688
43702500-625B	2.500	3.375	0.625	0.688
43703875-750B	3.875	4.750	0.750	0.825
43704000-625B	4.000	4.875	0.625	0.688
43704500-750B	4.500	5.375	0.750	0.825
43704750-750B	4.750	5.625	0.750	0.825
43705000-750B	5.000	5.875	0.750	0.825

Part Number	Rod Diameter d	Groove Diameter D	Seal Height L_1	Groove Height L
1/2" CROSS SECTION ("F")				
50001500-750B	1.500	2.500	0.750	0.825
50001750-750B	1.750	2.750	0.750	0.825
50002000-750B	2.000	3.000	0.750	0.825
50002500-500B	2.500	3.500	0.500	0.550
50002500-750B	2.500	3.500	0.750	0.825
50003000-750B	3.000	4.000	0.750	0.825
50003250-750B	3.250	4.250	0.750	0.825
50003375-625B	3.375	4.375	0.625	0.688
50003500-750B	3.500	4.500	0.750	0.825
50004000-750B	4.000	5.000	0.750	0.825
50004250-750B	4.250	5.250	0.750	0.825
50004500-750B	4.500	5.500	0.750	0.825
50005000-750B	5.000	6.000	0.750	0.825
50005250-750B	5.250	6.250	0.750	0.825
50005500-750B	5.500	6.500	0.750	0.825
50005750-750B	5.750	6.750	0.750	0.825
50006000-750B	6.000	7.000	0.750	0.825
50006250-750B	6.250	7.250	0.750	0.825
50006500-750B	6.500	7.500	0.750	0.825
50006750-750B	6.750	7.750	0.750	0.825
50007000-750B	7.000	8.000	0.750	0.825
50007250-750B	7.250	8.250	0.750	0.825
50007500-750B	7.500	8.500	0.750	0.825
50007750-750B	7.750	8.750	0.750	0.825
50008000-750B	8.000	9.000	0.750	0.825
50008250-750B	8.250	9.250	0.750	0.825
50008500-750B	8.500	9.500	0.750	0.825
50008750-750B	8.750	9.750	0.750	0.825
50009000-750B	9.000	10.000	0.750	0.825
50009250-750B	9.250	10.250	0.750	0.825
50010000-750B	10.000	11.000	0.750	0.825
50010500-750B	10.500	11.500	0.750	0.825
50010750-750B	10.750	11.750	0.750	0.825
50011000-750B	11.000	12.000	0.750	0.825
50011500-750B	11.500	12.500	0.750	0.825
50011750-750B	11.750	12.750	0.750	0.825
50012000-750B	12.000	13.000	0.750	0.825
50012125-750B	12.125	13.125	0.750	0.825
50012250-750B	12.250	13.250	0.750	0.825
50012500-750B	12.500	13.500	0.750	0.825
50013000-750B	13.000	14.000	0.750	0.825
50013250-750B	13.250	14.250	0.750	0.825
50014750-750B	14.750	15.750	0.750	0.825
50015000-750B	15.000	16.000	0.750	0.825
50015500-750B	15.500	16.500	0.750	0.825

Type B Loaded Lip Seals - Inch, cont'd.

Part Number	Rod Diameter d	Groove Diameter D	Seal Height L_1	Groove Height L
1/2" CROSS SECTION ("F")				
50016500-750B	16.500	17.500	0.750	0.825
50017000-750B	17.000	18.000	0.750	0.825
50018000-750B	18.000	19.000	0.750	0.825
50020000-750B	20.000	21.000	0.750	0.825
50021000-750B	21.000	22.000	0.750	0.825
50029000-750B	29.000	30.000	0.750	0.825
50034500-750B	34.500	35.500	0.750	0.825
5/8" CROSS SECTION ("F")				
62505000-1000B	5.000	6.250	1.000	1.100
62505250-1000B	5.250	6.500	1.000	1.100
62506000-1000B	6.000	7.250	1.000	1.100
62507250-1000B	7.250	8.500	1.000	1.100
62508500-1000B	8.500	9.750	1.000	1.100
62509000-1000B	9.000	10.250	1.000	1.100

Part Number	Rod Diameter d	Groove Diameter D	Seal Height L_1	Groove Height L
5/8" CROSS SECTION ("F")				
62509750-1000B	9.750	11.000	1.000	1.100
62511500-1000B	11.500	12.750	1.000	1.100
62518750-1000B	18.750	20.000	1.000	1.100
62519750-1000B	19.750	21.000	1.000	1.100
3/4" CROSS SECTION ("F")				
75008000-1250B	8.000	9.500	1.250	1.375
75008500-1125B	8.500	10.000	1.125	1.238
75009000-1250B	9.000	10.500	1.250	1.375
75010500-1000B	10.500	12.000	1.000	1.100
75012000-1250B	12.000	13.500	1.250	1.375
75014000-1250B	14.000	15.500	1.250	1.375
75020500-1000B	20.500	22.000	1.000	1.100
1" CROSS SECTION ("F")				
100016000-1250B	16.000	18.000	1.250	1.375

PIP Rings - Inch

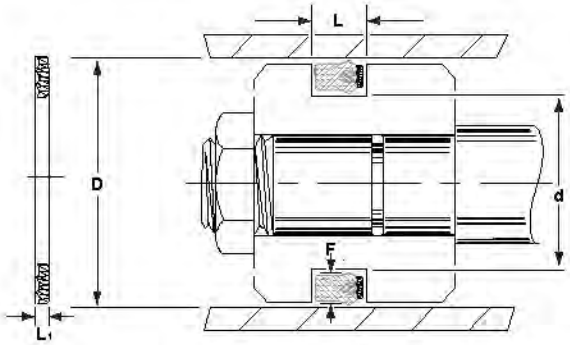

EXAMPLE: 25002750PR		
Cross Section	Inside Diameter	Suffix
250	02750	PR
1/4	2-3/4"	PIP Rings

"PIP" (Pressure Inverting Pedestal) rings convert type "B" loaded lip seals into bi-directional seals. Pip rings are made from a harder durometer urethane material and may be split for easier installation or cut down for in-between sizes.

Temperature: -60°F to 200°F Pressure: 0 to 5,000 PSI

Part Number	Groove Diameter d	Bore Diameter D	Seal Height L_1
1/8" CROSS SECTION ("F")			
12500437PR	0.437	0.687	0.062
12500750PR	0.750	1.000	0.062
12501250PR	1.250	1.500	0.062
12501500PR	1.500	1.750	0.062
12501750PR	1.750	2.000	0.062

Part Number	Groove Diameter d	Bore Diameter D	Seal Height L_1
3/16" CROSS SECTION ("F")			
18700750PR	0.750	1.125	0.125
18700875PR	0.875	1.250	0.125
18701000PR	1.000	1.375	0.125
18701125PR	1.125	1.500	0.125
18701250PR	1.250	1.625	0.125
18701500PR	1.500	1.875	0.125
18701625PR	1.625	2.000	0.125
18701750PR	1.750	2.125	0.125
18702125PR	2.125	2.500	0.125
18702500PR	2.500	2.875	0.125
18702625PR	2.625	3.000	0.125
18703000PR	3.000	3.375	0.125
18703125PR	3.125	3.500	0.125
18703625PR	3.625	4.000	0.125